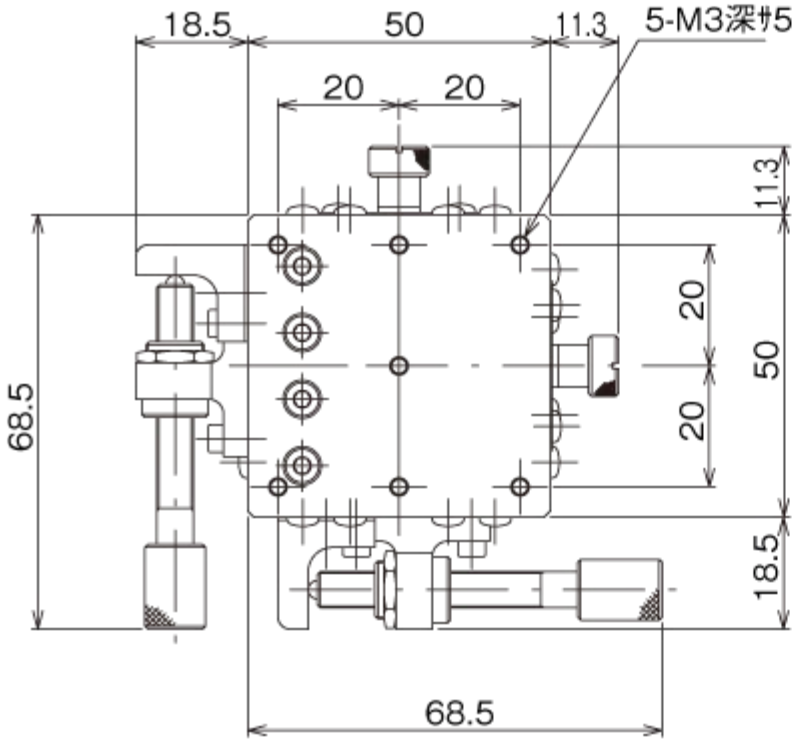
18.5
50
11.3
5-M3深ｻ5
20
20
11.3
20
50
20
68.5
18.5
68.5

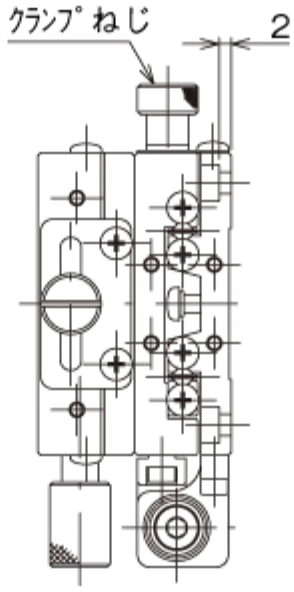
ｸﾗﾝﾌﾟねじ
2

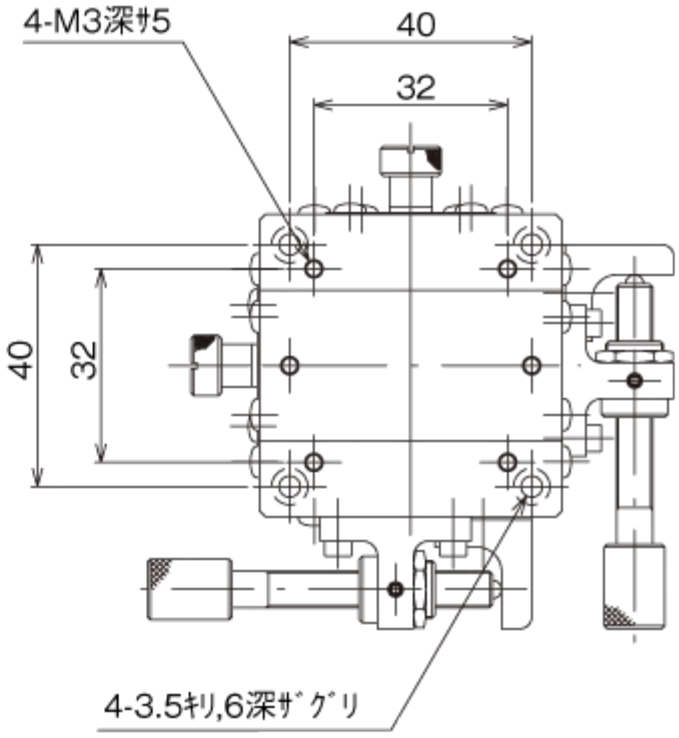
4-M3深ｻ5
40
32
40
32
4-3.5ｷﾘ,6深ｻﾞｸﾞﾘ

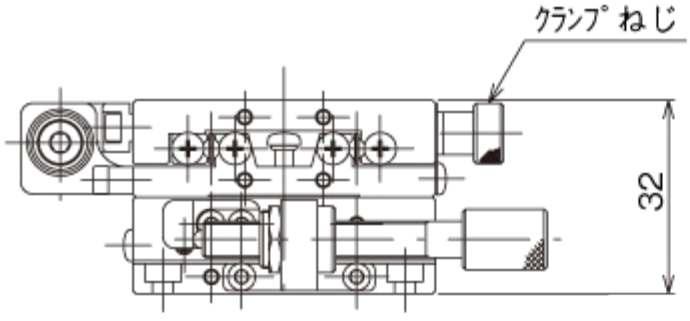
ｸﾗﾝﾌﾟねじ
32